empowered
by science

make your own sundial

what you'll need

- Printable template on A4 paper
- Cardboard
- Scissors (Parental supervision may be required)

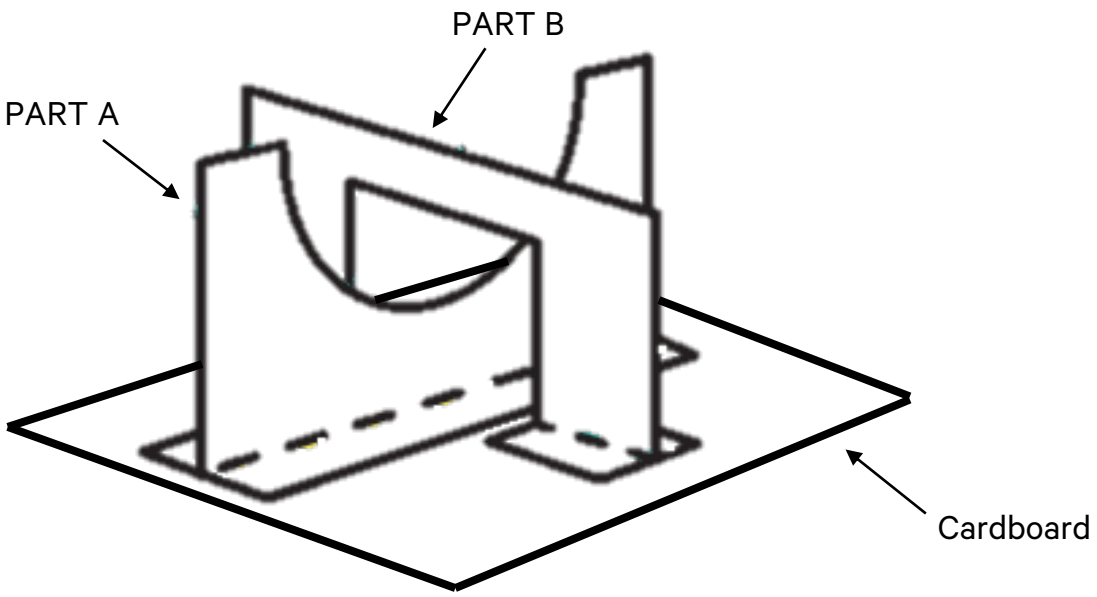

instructions

1. Print out template provided on an A4 paper.
2. Cut along the black outline (▬) to get PART A and PART B.
3. Fold along the dotted lines (▪▪▪▪) upwards or downwards as indicated.
4. Assemble and glue PART A and PART B on a piece of cardboard base as shown in the diagram below. Ensure PARTS A and B intersect directly in the middle at the 1pm line, forming an 'X' when looked at from above.
5. Place the sundial in a bright and open space. Position the sundial according to the directions indicated. Part B functions as a gnomon, which will cast a shadow on the hour lines on PART A, telling the time.

SINGAPORE SCIENCE FESTIVAL 2020

PART A
Fold up
West
East
Fold down
8am
9am
10am
11am
12nn
1pm
2pm
3pm
4pm
5pm
6pm
Fold down
8am
9am
10am
11am
12nn
1pm
2pm
3pm
4pm
5pm
6pm
Fold up
West
East

PART B
Fold up
North
South
Fold down
Fold down
Fold up
North
South
Fold up